# Music Room Inspection

FIND FIVE DIFFERENCES

Picture B has one missing detail on five objects. One object is unchanged. Circle the five changed objects.

## A

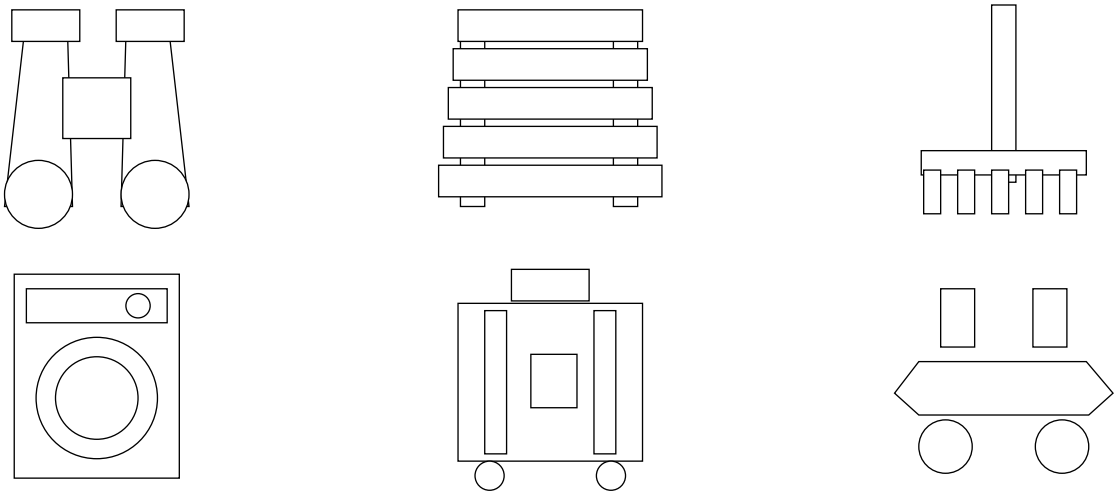

## B

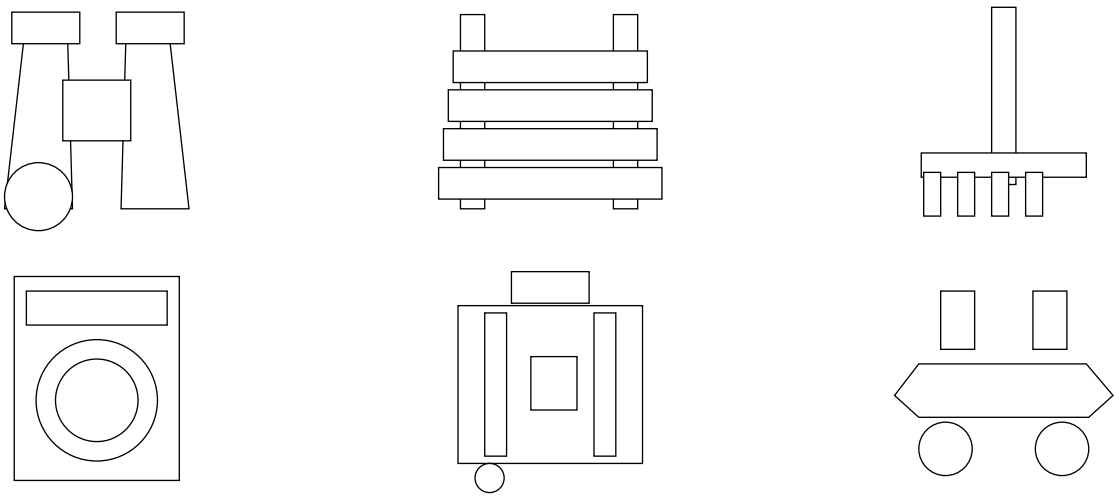

# Music Room Inspection

ANSWER GUIDE

Picture B has one missing detail on five objects. One object is unchanged. Circle the five changed objects.

## A

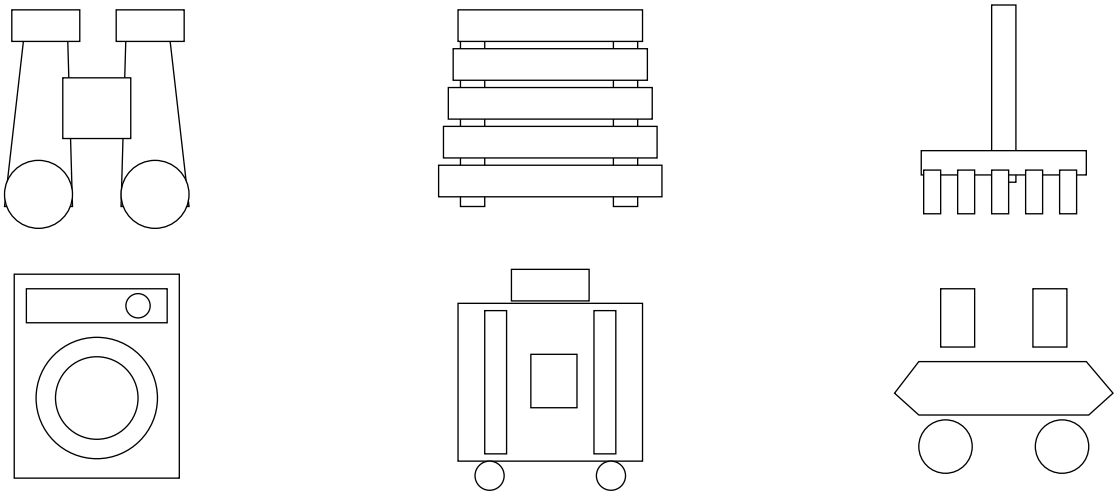

## B

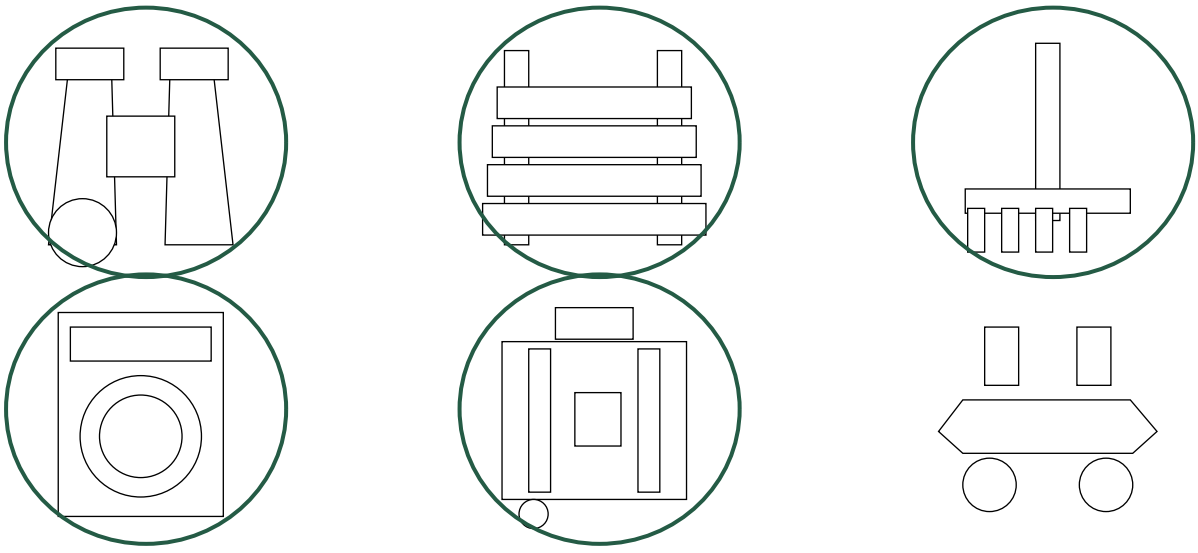

# Music Room Inspection

WHAT CHANGED

The missing details are listed below. Compare them with picture A.

1. Binoculars: the right circular lens is missing in B.

2. Xylophone: the top bar is missing in B.

3. Garden Rake: the rightmost tooth is missing in B.

4. Washing Machine: the small control button is missing in B.

5. Travel Suitcase: the right wheel is missing in B.

6. Skateboard: unchanged.