Museum Cabinet Inspection

FIND FIVE DIFFERENCES

Picture B has one missing detail on five objects. One object is unchanged. Circle the five changed objects.

A

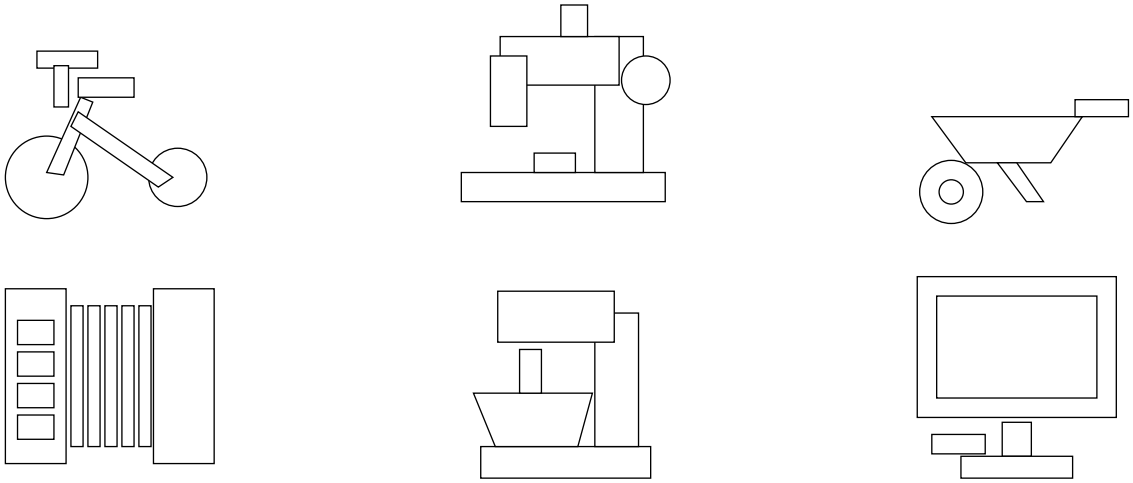

B

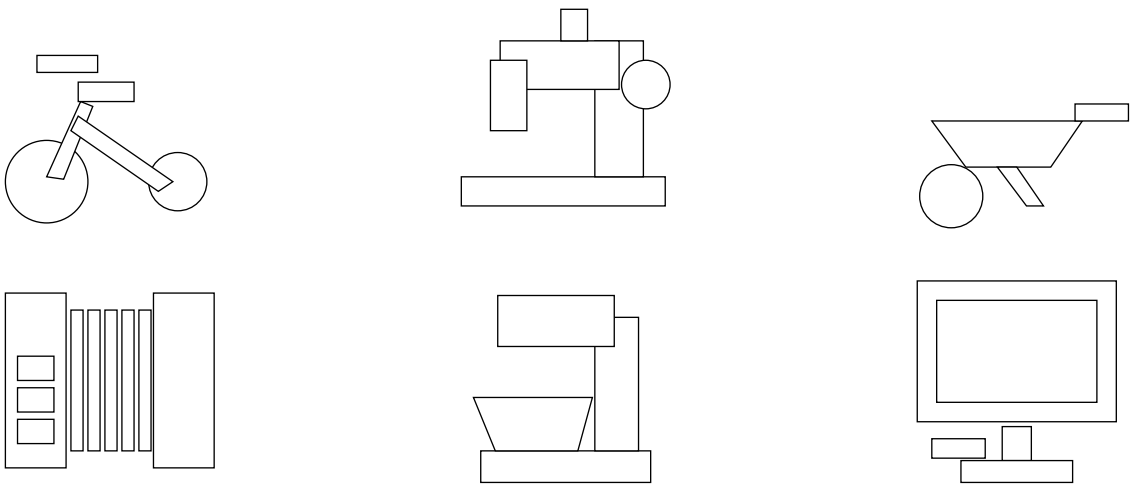

Museum Cabinet Inspection

ANSWER GUIDE

Picture B has one missing detail on five objects. One object is unchanged. Circle the five changed objects.

A

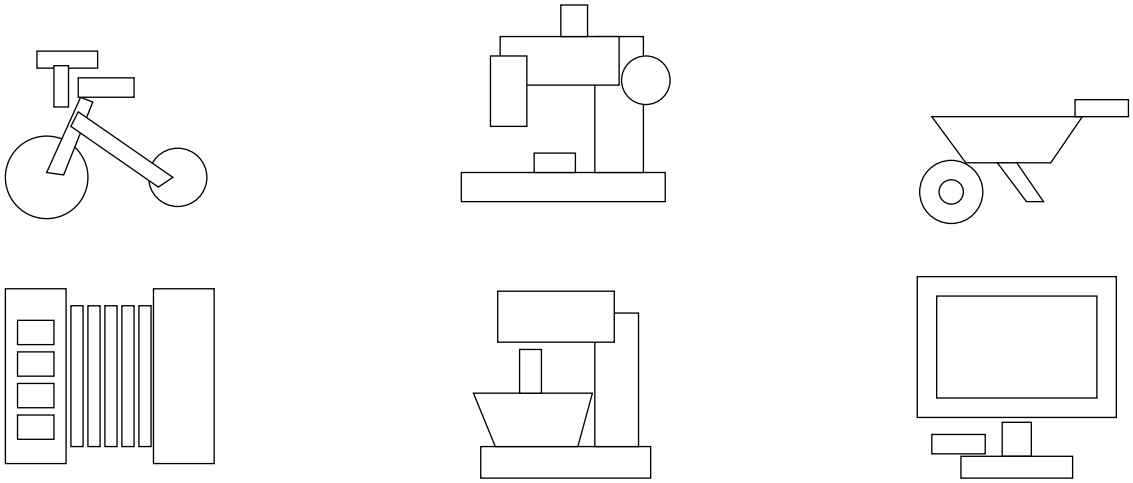

B

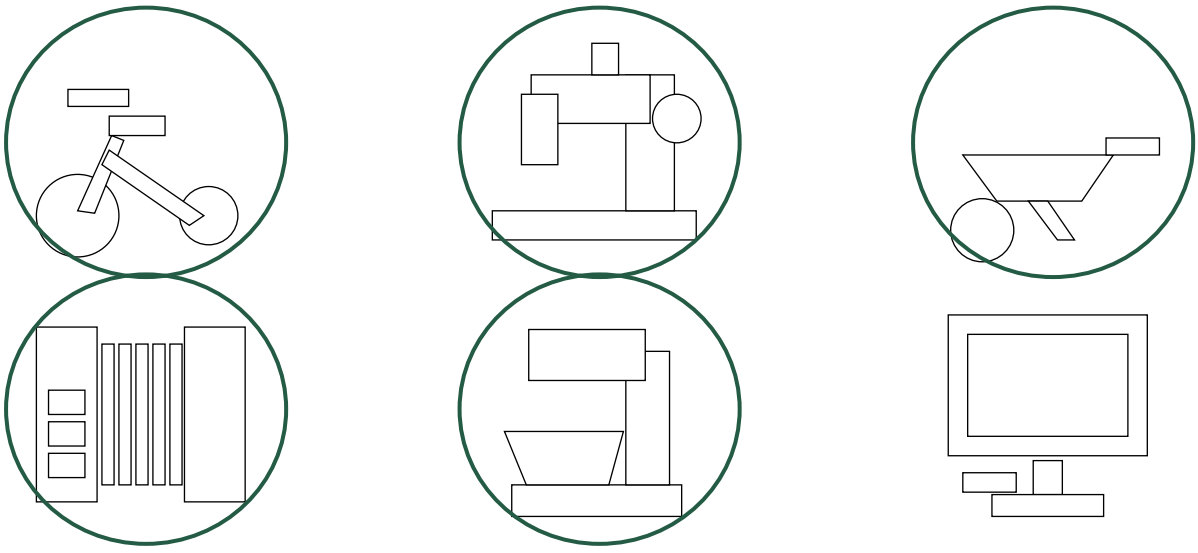

Museum Cabinet Inspection

WHAT CHANGED

The missing details are listed below. Compare them with picture A.

1. Tricycle: the handlebar stem is missing in B.

2. Sewing Machine: the small platform on the base is missing in B.

3. Wheelbarrow: the wheel centre is missing in B.

4. Accordion: the topmost small key is missing in B.

5. Kitchen Mixer: the mixing stem is missing in B.

6. Computer Monitor: unchanged.