Journey Shelf Inspection

FIND FIVE DIFFERENCES

Picture B has one missing detail on five objects. One object is unchanged. Circle the five changed objects.

A

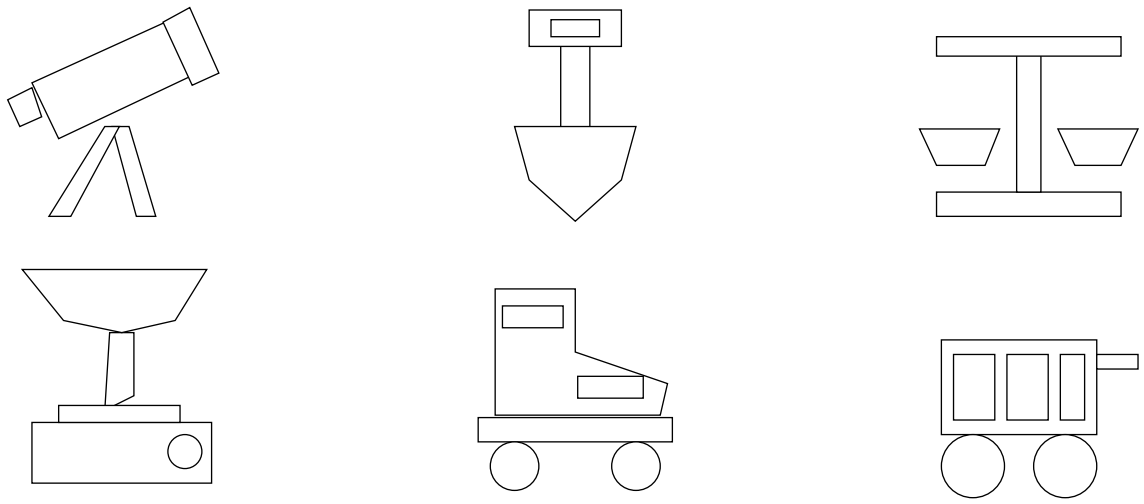

B

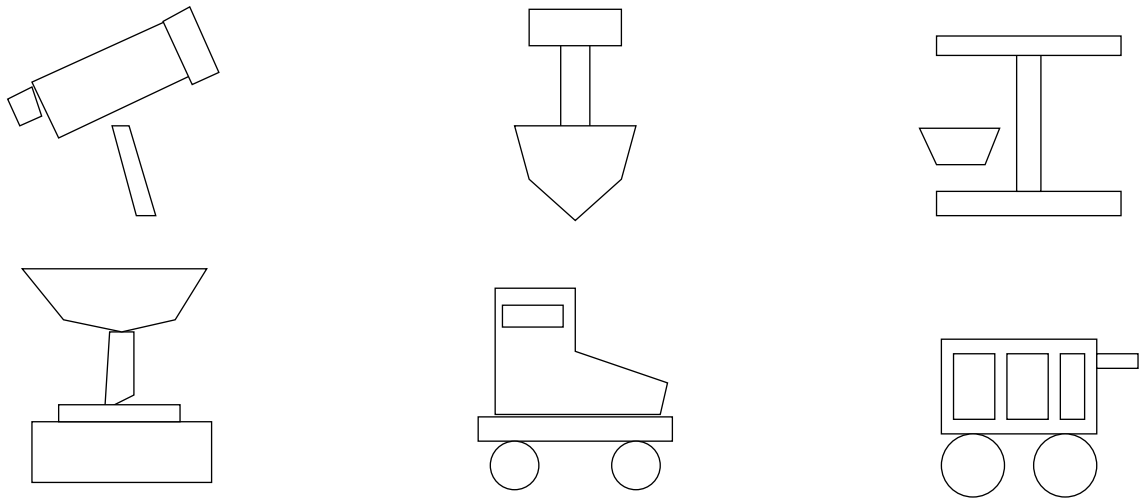

Journey Shelf Inspection

ANSWER GUIDE

Picture B has one missing detail on five objects. One object is unchanged. Circle the five changed objects.

A

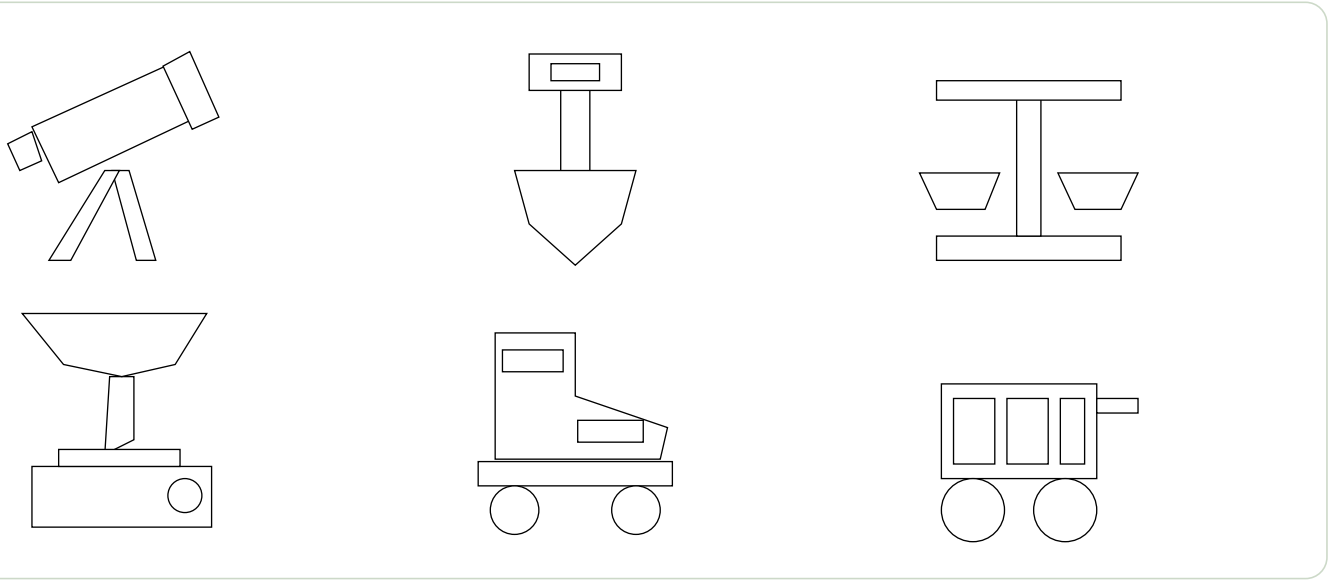

B

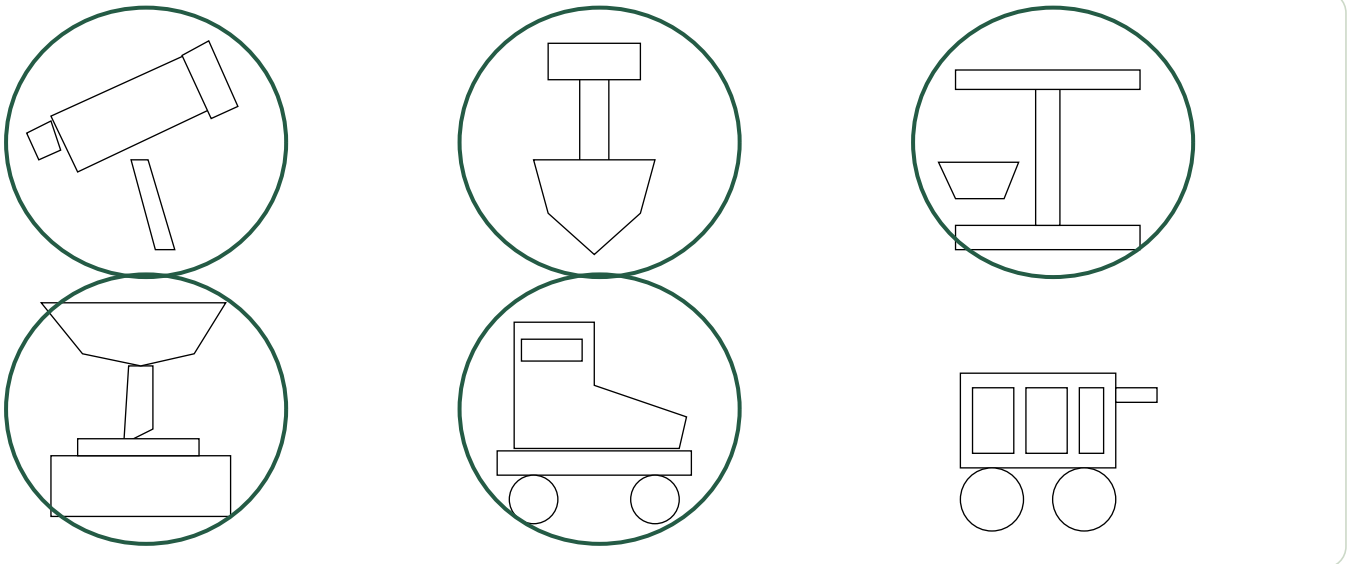

Journey Shelf Inspection

WHAT CHANGED

The missing details are listed below. Compare them with picture A.

1. Telescope: the left tripod leg is missing in B.

2. Garden Trowel: the inner handle rectangle is missing in B.

3. Balance Scale: the right pan is missing in B.

4. Gramophone: the round side knob is missing in B.

5. Roller Skate: the front rectangular panel is missing in B.

6. Garden Cart: unchanged.