Garden Shed Inspection

FIND FIVE DIFFERENCES

Picture B has one missing detail on five objects. One object is unchanged. Circle the five changed objects.

A

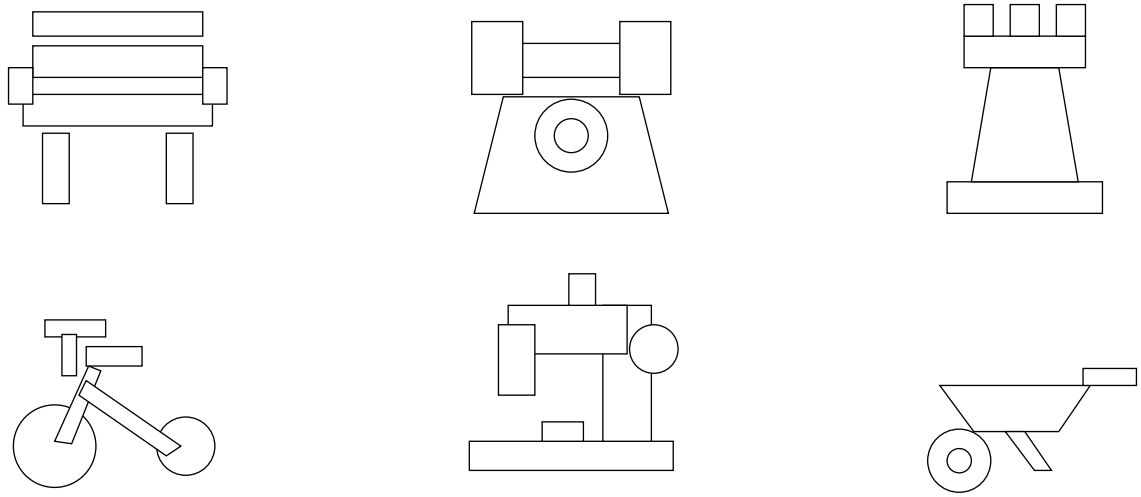

B

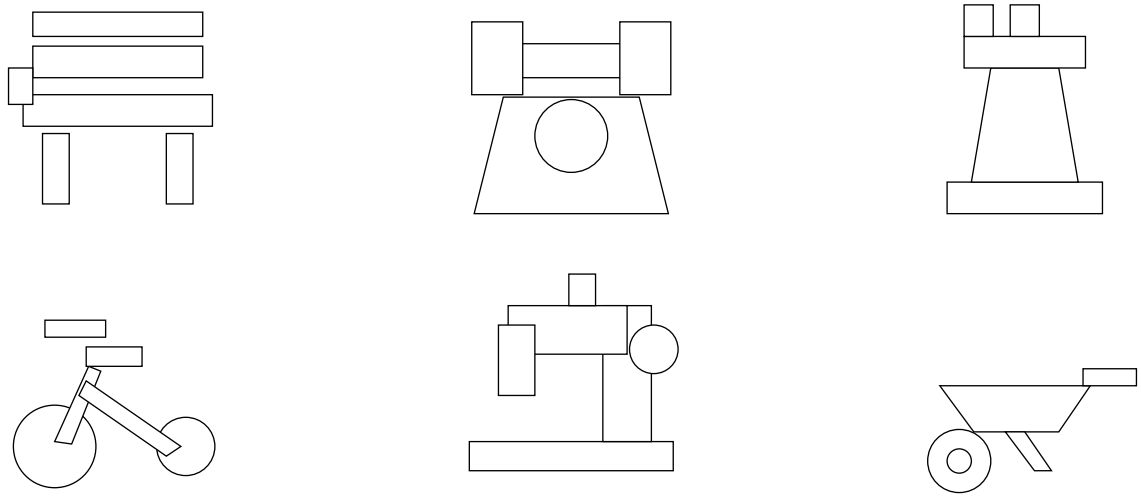

Garden Shed Inspection

ANSWER GUIDE

Picture B has one missing detail on five objects. One object is unchanged. Circle the five changed objects.

A

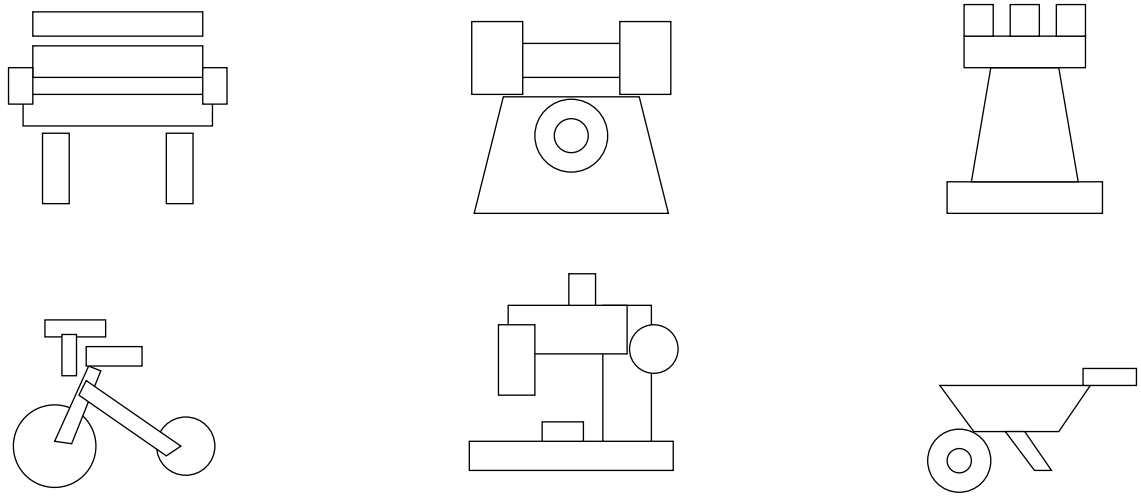

B

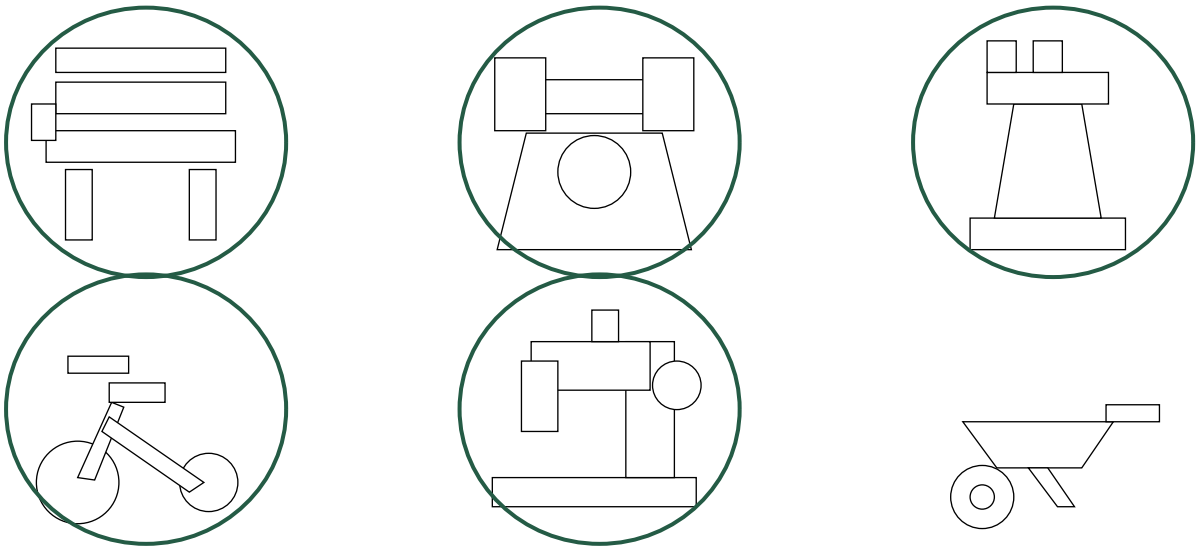

Garden Shed Inspection

WHAT CHANGED

The missing details are listed below. Compare them with picture A.

1. Park Bench: the right armrest is missing in B.

2. Desk Telephone: the centre dial circle is missing in B.

3. Chess Rook: the right top block is missing in B.

4. Tricycle: the handlebar stem is missing in B.

5. Sewing Machine: the small platform on the base is missing in B.

6. Wheelbarrow: unchanged.